# 155Mbps 1550nm 120km SFP Optical Transceiver Module

# S-SP5M55LA2-xD

## Features

- Hot-pluggable
- 155Mbps operation
- +3.3V single power supply
- High-performance and cost-effective
- 1550nm LD and PIN photodetector for 120km trans-mission
- Compliant with SFP MSAand SFF-8472 with duplex LC receptacle
- Digital Diagnostic Monitoring
- Compatible with SONET OC-3
- Operating case temperature:0 to +70°C
  -40 to +85°C
- RoHS compliant (lead free)

## Applications

- Fast Ethernet
- Fiber Channel
- Switch to Switch interface
- Switched backplane applications
- Router/Server interface
- Other optical transmission systems

## Description

SFP transceivers are high performance, cost effective modules supporting 155Mbps and 120km transmission distance with SMF.

The transceiver consists of three sections: a 1550nm LD transmitter, a PIN photodiode integrated with a trans-impedance preamplifier (TIA).SFP modules satisfy class I laser safety requirements.

The transceivers are compatible with SFP Multi-Source Agreement (MSA) and SFF-8472. For further information, please refer to SFP MSA.

## Absolute Maximum Ratings

| Parameter | Symbol | Min | Typ | Max | Unit |
|---|---|---|---|---|---|
| Power Supply Voltage | Vcc | -0.5 | | 4 | V |
| Storage Temperature Range | Ts | -40 | | 85 | °C |
| Relative Humidity - Storage | $RH_S$ | 0 | | 95 | % |
| Relative Humidity - Operating | $RH_O$ | 0 | | 85 | % |

# 155Mbps 1550nm 120km SFP Optical Transceiver Module

# S-SP5M55LA2-xD

## Recommended Operating Conditions

| Parameter | Symbol | Min | Typ | Max | Unit |
|---|---|---|---|---|---|
| Case Operating Temperature Range | Tc | 0 | - | 70 | °C |
| | | -40 | - | 85 | |
| Power Supply Voltage | $V_{cc}$ | 3.14 | 3.3 | 3.47 | V |
| Supply Current | $I_{cc}$ | - | - | 300 | mA |
| Data Rate | BR | - | 155 | - | Mbps |

## Electrical Characteristics

| **Transmitter Electrical Characteristics** | | | | | |
|---|---|---|---|---|---|
| **Parameter** | **Symbol** | **Min** | **Typ** | **Max** | **Unit** |
| Differential Input Voltage Swing | $V_{IN}$ | 400 | - | 2000 | mV |
| Tx Differential Input Impendence | $Z_{IN}$ | - | 100 | - | Ω |
| Transmitter Disable Voltage | $V_{DIS}$ | 2.0 | - | $V_{CC}$+0.3 | V |
| Transmitter Enable Voltage | $V_{EN}$ | 0 | - | 0.8 | V |
| $T_{FAULT}$ Logic High | $V_{TFH}$ | 2.4 | - | $V_{CC}$ | V |
| $T_{FAULT}$ Logic Low | $V_{TFL}$ | $V_{EE}$ | - | $V_{EE}$+0.4 | V |
| **Receiver Electrical Characteristics** | | | | | |
| **Parameter** | **Symbol** | **Min** | **Typ** | **Max** | **Unit** |
| Differential output Voltage Swing | $V_{OUT}$ | 400 | - | 1000 | mV |
| Rx Differential Output Impendence | $Z_{OUT}$ | - | 100 | - | Ω |
| LOS Assert Voltage | $V_{LOSA}$ | 2.4 | - | $V_{CC}$ | V |
| LOS De-assert Voltage | $V_{LOSD}$ | $V_{EE}$ | - | $V_{EE}$+0.4 | V |

## Optical Characteristics

| **Transmitter Characteristics** | | | | | | |
|---|---|---|---|---|---|---|
| **Parameter** | **Symbol** | **Min** | **Typ** | **Max** | **Unit** | **Notes** |
| Laser Type | | | LD | | | |
| Data Rate | - | - | 155 | - | Mb/s | |
| Center Wavelength Range | λ | 1500 | 1550 | 1580 | nm | |
| Spectral Width@-20dB | Δλ | - | - | 1 | nm | |
| Average Launch power of OFF transmitter | $P_{OFF}$ | - | - | -40 | dBm | |
| Launch Optical Power | Pout | 0 | - | 5 | dBm | 1 |
| Extinction Ratio | ER | 10 | - | - | dB | |

# 155Mbps 1550nm 120km SFP Optical Transceiver Module

## S-SP5M55LA2-xD

| Receiver Characteristics | | | | | | |
|---|---|---|---|---|---|---|
| Receiver Type | | PIN | | | | |
| Data Rate | - | - | 155 | - | Mb/s | |
| Operating Central Wavelength | λ | 1260 | - | 1610 | nm | |
| Receiver Sensitivity | Sen | - | - | -36 | dBm | 2 |
| Receiver Overload | $P_{SAT}$ | -10 | - | - | dBm | |
| LOS Assert | LOSA | -45 | - | - | dBm | |
| LOS De-Assert | LOSD | - | - | -36 | dBm | |
| LOS Hysteresis | LOSH | 0.5 | 3 | 5 | dB | |
| **Notes** | | | | | | |
| 1. The optical power is launched into SMF.<br>2. Measured with $2^{23}$-1 PRBS@155Mbps,BER<$10^{-10}$ | | | | | | |

## General Specifications

| Parameter | Symbol | Min | Typ | Max | Unit | Notes |
|---|---|---|---|---|---|---|
| Bit Rate | BR | - | 155 | - | Mb/s | |
| Bit Error Ratio | BER | - | - | $10^{-10}$ | | |

## Pin Definitions

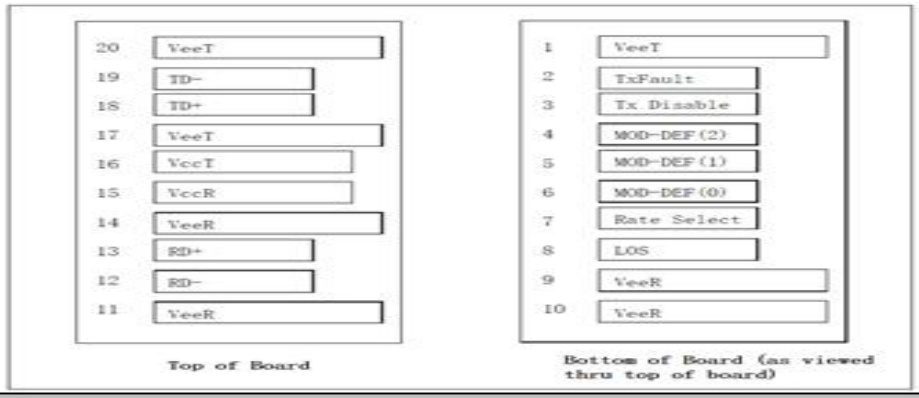


| PIN Assignment | | | |
|---|---|---|---|
| **PIN** | **Symbol** | **Description** | **Notes** |
| 1 | $V_{EET}$ | Transmitter Ground | |
| 2 | Tx_FAULT | Transmitter Fault | 1 |
| 3 | Tx_DIS | Transmit Disable | 1 |
| 4 | MOD_DEF 2 | Serial Data | 1 |

| | | | |
|---|---|---|---|
| 5 | MOD_DEF 1 | Clock Signal | 1 |
| 6 | MOD_DEF 0 | Interface Digital Ground | |
| 7 | Rate Select | Not Connected | |
| 8 | Rx_LOS | Receiver Loss of Signal | 1 |
| 9 | $V_{EER}$ | Receiver Ground | |
| 10 | $V_{EER}$ | Receiver Ground | |
| 11 | $V_{EER}$ | Receiver Ground | |
| 12 | RD- | Rx_Data Output (Inverted) | |
| 13 | RD+ | Rx_Data Output (Non Inverted) | |
| 14 | $V_{EER}$ | Receiver Ground | |
| 15 | $V_{CCR}$ | Receiver DC Power | |
| 16 | $V_{CCT}$ | Transmitter DC Power | |
| 17 | $V_{EET}$ | Transmitter Ground | |
| 18 | TD+ | Tx_Data Input (Non Inverted) | |
| 19 | TD- | Tx_Data Input (Inverted) | |
| 20 | $V_{EET}$ | Transmitter Ground | |

**Notes**

1. The uncommitted Tx_Fault, Rx_LOS, MOD_DEF 1 and MOD_DEF 2 LVTTL monitor and control pins each require a pull up resistor of 4.7k to 10k Ohms on the host board.

## Recommended Interface Circuit

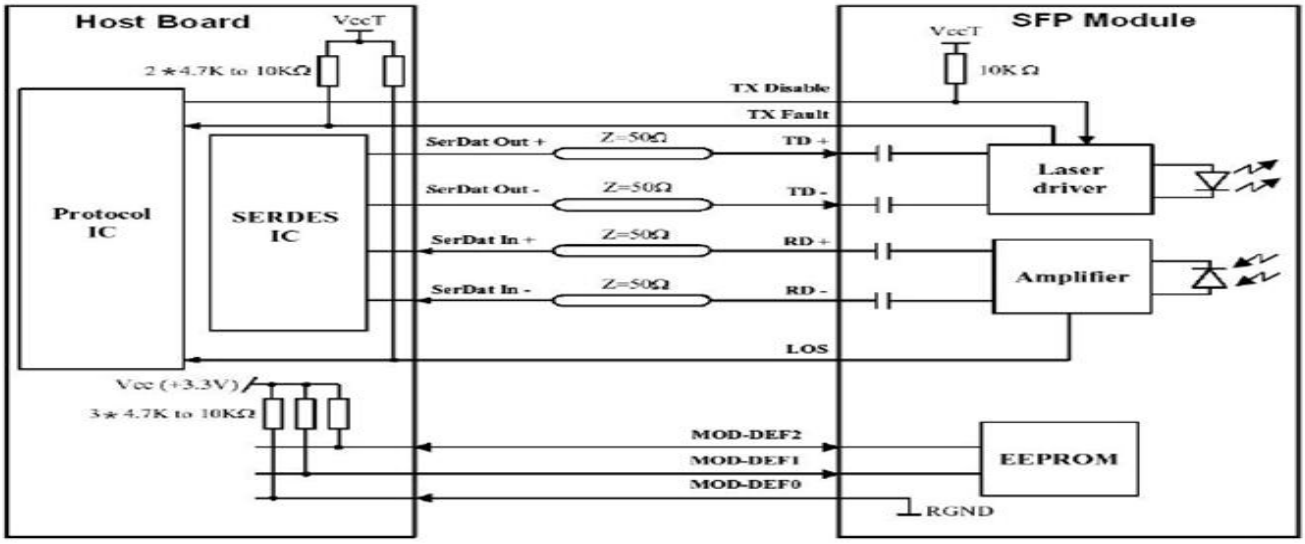

# 155Mbps 1550nm 120km SFP Optical Transceiver Module

# S-SP5M55LA2-xD

## Mechanical Dimensions

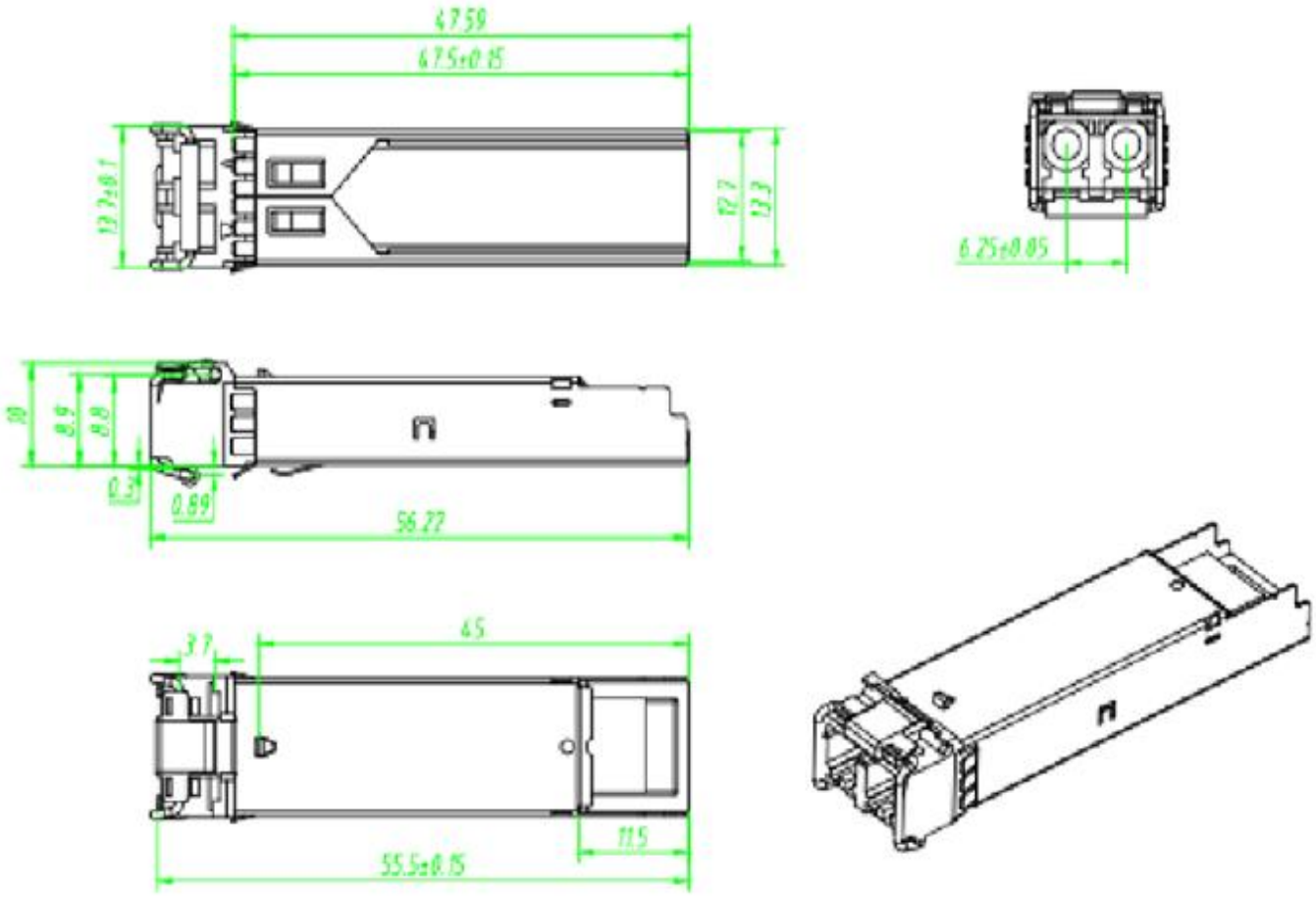


## Ordering information

| Part Number | Product Description |
|---|---|
| S-SP5M31LA2-CD | SFP, 155Mbps, 1550nm,SM,120km, 0ºC~+70ºC, With DDM |
| S-SP5M31LA2-ID | SFP, 155Mbps, 1550nm,SM, 120km, -40ºC~+85ºC, With DDM |