155M T1550/R1310nm 40km BIDI SFP Optical Transceiver Module

S-SB5M53S40-xD

Features

- Up to155Mbps data-rate
- +3.3V single power supply
- High-performance and cost-effective
- 1550nm LD and PIN photodetector for 40km transmission
- Compliant with SFP MSA and SFF-8472 with simplex SC receptacle
- Digital Diagnostic Monitoring
- Operating case temperature:

  Commercial:0 to +70°C

  Industrial:-40 to +85°C
- RoHS compliant (lead free)

Applications

- Fast Ethernet
- SDH STM-1,SONET OC-3
- Fiber Channel
- Other optical links

Description

BIDI SFP transceivers are high performance, cost effective module supporting 155Mbps and 40km transmission distance with SMF(9/125μm).

The transceiver consists of two sections: a 1550nm LD laser transmitter, a PIN photodiode integrated with a trans-impedance amplifier (TIA). BIDI SFP transceiver satisfies class I laser safety requirements.

The transceiver is compatible with SFP Multi-Source Agreement (MSA) and SFF-8472. For further information, please refer to SFP MSA.

155M T1550/R1310nm 40km BIDI SFP Optical Transceiver Module

S-SB5M53S40-xD

Absolute Maximum Ratings

Parameter	Symbol	Min	Typ	Max	Unit
Power Supply Voltage	V_{CC}	-0.5	-	4	V
Storage Temperature Range	T_S	-40	-	85	°C
Relative Humidity - Storage	RH_S	0	-	95	%
Relative Humidity - Operating	RH_O	0	-	85	%

Recommended Operating Conditions

Parameter	Symbol	Min	Typ	Max	Unit
Case Operating Temperature Range	Tc	0	-	70	°C
		-40	-	85	
Power Supply Voltage	V_{cc}	3.14	3.3	3.47	V
Supply Current	I_{cc}	-	-	300	mA
Data Rate	BR	-	155	-	Mbps

Electrical Characteristics

Transmitter Electrical Characteristics					
Parameter	**Symbol**	**Min**	**Typ**	**Max**	**Unit**
Differential Input Voltage Swing	V_{IN}	400	-	2000	mV
Tx Differential Input Impendence	Z_{IN}	-	100	-	Ω
Transmitter Disable Voltage	V_{DIS}	2.0	-	V_{CC}+0.3	V
Transmitter Enable Voltage	V_{EN}	0	-	0.8	V
T_{FAULT} Logic High	V_{TFH}	2.4	-	V_{CC}	V
T_{FAULT} Logic Low	V_{TFL}	V_{EE}	-	V_{EE}+0.4	V
Receiver Electrical Characteristics					
Parameter	**Symbol**	**Min**	**Typ**	**Max**	**Unit**
Differential output Voltage Swing	V_{OUT}	400	-	1000	mV
Rx Differential Output Impendence	Z_{OUT}	-	100	-	Ω
LOS Assert Voltage	V_{LOSA}	2.4	-	V_{CC}	V
LOS De-assert Voltage	V_{LOSD}	V_{EE}	-	V_{EE}+0.4	V

155M T1550/R1310nm 40km BIDI SFP Optical Transceiver Module

S-SB5M53S40-xD

Optical Characteristics

Transmitter Characteristics						
Parameter	**Symbol**	**Min**	**Typ**	**Max**	**Unit**	**Notes**
Laser Type			LD			
Data Rate	-	-	155	-	Mb/s	
Center Wavelength Range	λ	1480	1550	1580	nm	
Spectral Width@-20dB	Δλ	-	-	1	nm	
Average Launch power of OFF transmitter	P_{OFF}	-	-	-40	dBm	
Launch Optical Power	Pout	-8	-	-2	dBm	1
Extinction Ratio	ER	8.2	-	-	dB	
Receiver Characteristics						
Receiver Type			PIN			
Data Rate	-	-	155	-	Mb/s	
Operating Central Wavelength	λ	1260	1310	1360	nm	
Receiver Sensitivity	Sen	-	-	-32	dBm	2
Receiver Overload	P_{SAT}	-8	-	-	dBm	
LOS Assert	LOSA	-45	-	-	dBm	
LOS De-Assert	LOSD	-	-	-32	dBm	
LOS Hysteresis	LOSH	0.5	3	5	dB	

Notes

1. Average power figures are informative only
2. Measured with 2^{23}-1 PRBS@155Mbps,BER<10^{-10}

General Specifications

Parameter	**Symbol**	**Min**	**Typ**	**Max**	**Unit**	**Notes**
Bit Rate	BR	-	155	-	Mb/s	
Bit Error Ratio	BER	-	-	10^{-10}		

155M T1550/R1310nm 40km BIDI SFP Optical Transceiver Module

S-SB5M53S40-xD

Pin Definitions

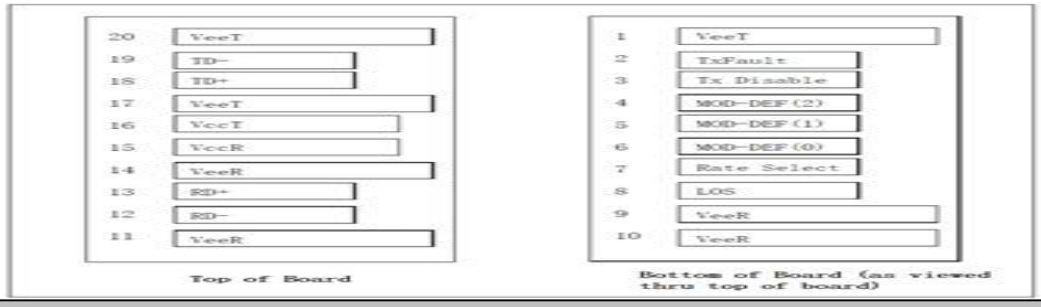

PIN Assignment			
PIN	**Symbol**	**Description**	**Notes**
1	V_{EET}	Transmitter Ground	
2	Tx_FAULT	Transmitter Fault	1
3	Tx_DIS	Transmit Disable	1
4	MOD_DEF 2	Serial Data	1
5	MOD_DEF 1	Clock Signal	1
6	MOD_DEF 0	Interface Digital Ground	
7	Rate Select	Not Connected	
8	Rx_LOS	Receiver Loss of Signal	1
9	V_{EER}	Receiver Ground	
10	V_{EER}	Receiver Ground	
11	V_{EER}	Receiver Ground	
12	RD-	Rx_Data Output (Inverted)	
13	RD+	Rx_Data Output (Non Inverted)	
14	V_{EER}	Receiver Ground	
15	V_{CCR}	Receiver DC Power	
16	V_{CCT}	Transmitter DC Power	
17	V_{EET}	Transmitter Ground	
18	TD+	Tx_Data Input (Non Inverted)	
19	TD-	Tx_Data Input (Inverted)	
20	V_{EET}	Transmitter Ground	

Notes

1. The uncommitted Tx_Fault, Rx_LOS, MOD_DEF 1 and MOD_DEF 2 LVTTL monitor and control pins each require a pull up resistor of 4.7k to 10k Ohms on the host board.

155M T1550/R1310nm 40km BIDI SFP Optical Transceiver Module

S-SB5M53S40-xD

Recommended Interface Circuit

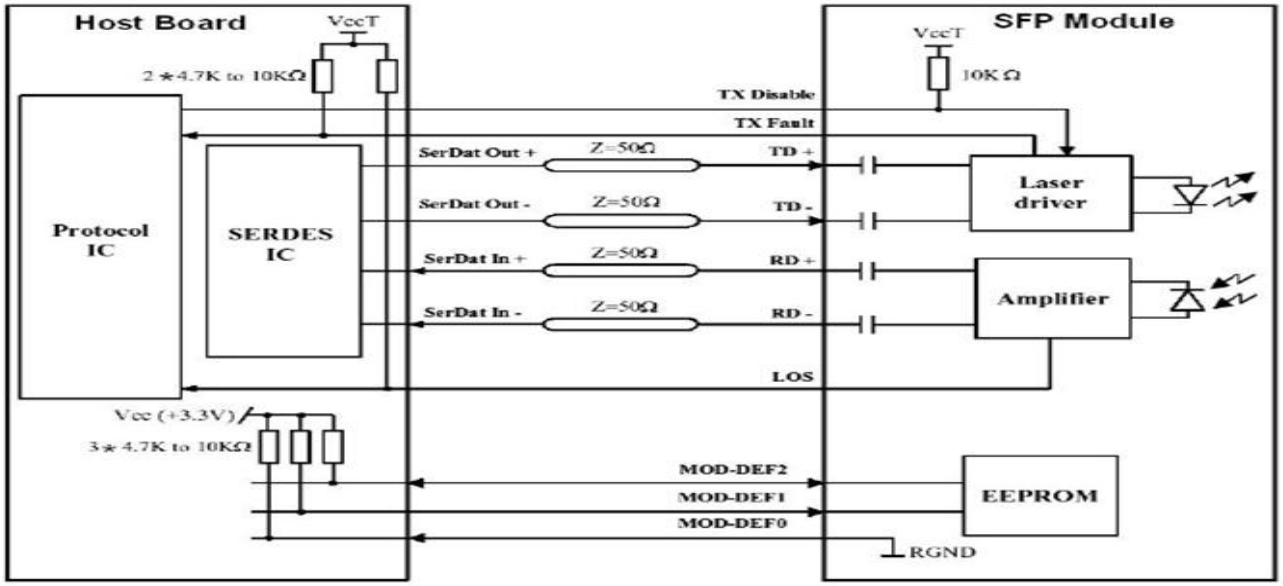

Recommended Host Board Supply Filtering Circuit

The MSA power supply noise rejection filter is required on the host PCB to meet data sheet performance. The MSA filter incorporates an inductor which should be rated 400mA DC and 1Ω serial resistance or better. It should not be replaced with a ferrite. The required filter is illustrated in Figure. The MSA also specifies that 4.7K to 10KΩ pull-up resistors for Tx Fault, LOS, and MOD_DEF(0,1,2) are required on the host PCB. Figure is the suggested transceiver/host interface.

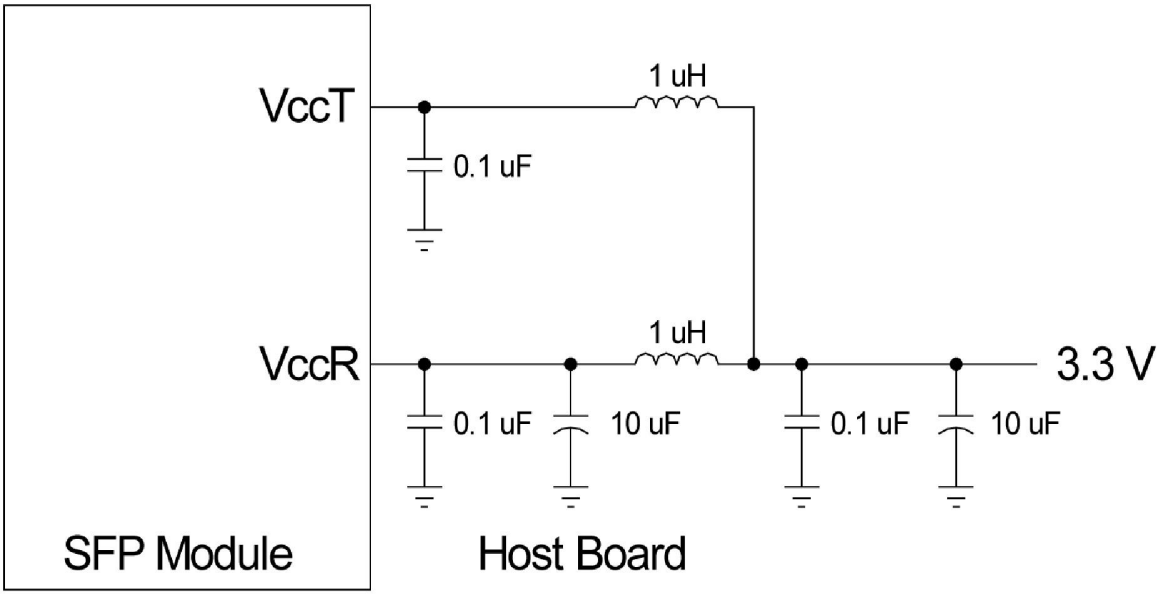

155M T1550/R1310nm 40km BIDI SFP Optical Transceiver Module

S-SB5M53S40-xD

Mechanical Dimensions

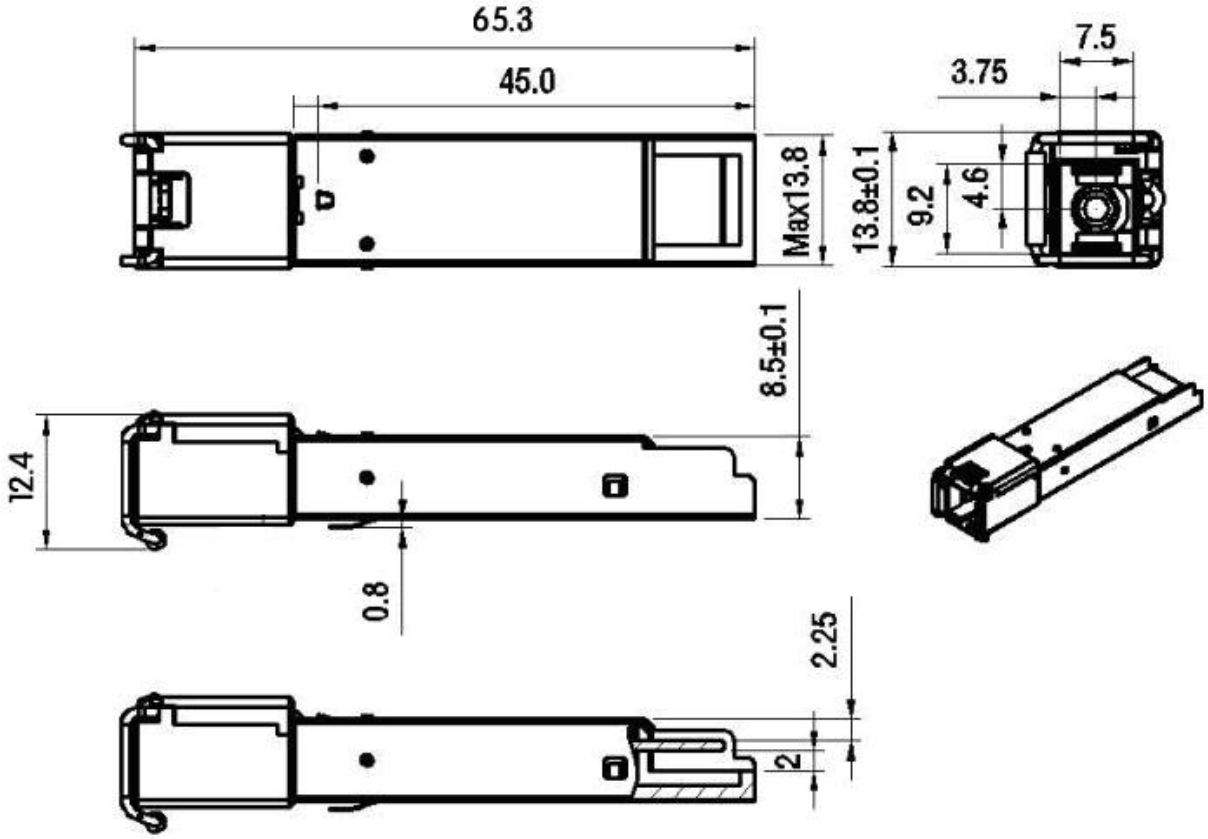

Ordering information

Part Number	Product Description
S-SB5M53S40-CD	BIDI SFP, 155Mbps, Tx1550/Rx1310nm,SC, SM, 40km, 0ºC~+70ºC, With DDM
S-SB5M53S40-ID	BIDI SFP, 155Mbps, Tx1550/Rx1310nm, SC,SM, 40km, -40ºC~+85ºC, With DDM