10G T1550/R1490nm 80km BIDI SFP+ Optical Transceiver Module

S-FB1054L80-xD

Features

- Hot-pluggable
- Single LC interface
- Supports up to 10.7Gbps bit rates
- 1550nm Cooled EML laser and APD photodiode,
- Applicable for 80km SMF connection
- Compliant with SFP+ MSA and SFF-8472
- Single +3.3V power supply
- Real Time Digital Diagnostic Monitoring
- Operating Temperature:0 to +70°C
- RoHS compliant (lead free)

Applications

- 10Gbps Optical systems
- 10GBASE-ZR at 10.3125Gbps
- 10GBASE-ZW at 9.953Gbps
- LTE systems
- Other Optical links

Description

10G 1550nm SFP+ BIDI transceivers are high performance, cost effective modules supporting data rate of 10Gbps and 80km transmission distance with SMF.

The transceiver consists of three sections: a Cooled EML laser transmitter, a APD photodiode integrated with a trans-impedance preamplifier (TIA) and MCU control unit. All modules satisfy class I laser safety requirements.

The transceivers are compatible with SFP Multi-Source Agreement and SFF-8472 digital diagnostics functions.

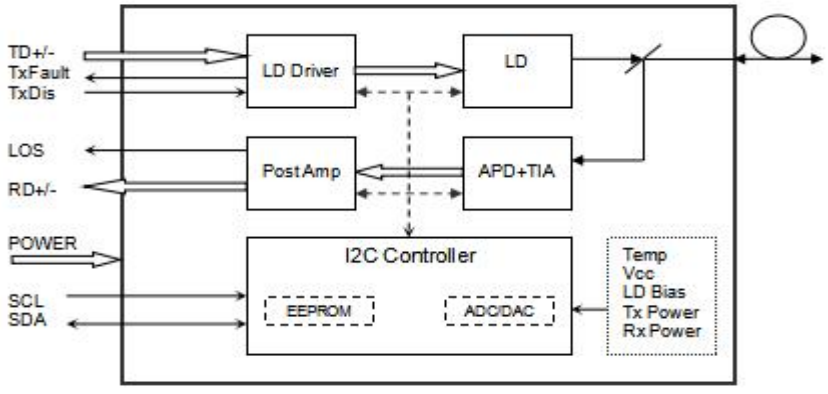

Transceiver functional diagram

10G T1550/R1490nm 80km BIDI SFP+ Optical Transceiver Module

S-FB1054L80-xD

Absolute Maximum Ratings

Parameter	Symbol	Min	Typ	Max	Unit
Power Supply Voltage	Vcc	-0.5		4.5	V
Storage Temperature Range	Ts	-40		85	°C
Relative Humidity - Storage	RH_S	0		95	%
Relative Humidity - Operating	RH_O	5		85	%

Recommended Operating Conditions

Parameter	Symbol	Min	Typ	Max	Unit
Case Operating Temperature Range	Tc	0	-	70	°C
Power Supply Voltage	V_{cc}	3.14	3.3	3.47	V
Supply Current	I_{cc}	-	-	450	mA
Data Rate	BR	1.0	10.3	10.7	Gbps

Electrical Characteristics

Transmitter Electrical Characteristics					
Parameter	**Symbol**	**Min**	**Typ**	**Max**	**Unit**
Differential Input Voltage Swing	V_{IN}	180	-	850	mV
Tx Differential Input Impendence	Z_{IN}	90	100	110	Ω
Transmitter Disable Voltage	V_{DIS}	2.0	-	V_{CC}+0.3	V
Transmitter Enable Voltage	V_{EN}	0	-	0.8	V
T_{FAULT} Logic High	V_{TFH}	2.0	-	V_{CC}	V
T_{FAULT} Logic Low	V_{TFL}	0	-	V_{EE}+0.4	V
Receiver Electrical Characteristics					
Parameter	**Symbol**	**Min**	**Typ**	**Max**	**Unit**
Differential output Voltage Swing	V_{OUT}	300	-	900	mV
Rx Differential Output Impendence	Z_{OUT}	-	100	-	Ω
LOS Assert Voltage	V_{LOSA}	2.0	-	V_{CC}	V
LOS De-assert Voltage	V_{LOSD}	V_{EE}	-	0.8	V

10G T1550/R1490nm 80km BIDI SFP+ Optical Transceiver Module

S-FB1054L80-xD

Optical Characteristics

Parameter	Symbol	Min	Typ	Max	Unit	Notes
Transmitter Characteristics						
Laser Type			DFB			
Center Wavelength	λ	1530	1550	1560	nm	
Spectral Width@-20dB	Δλ	-	-	1	nm	
Side Mode Suppression Ratio	SMSR	30	-	-	dB	
Launch Optical Power	Pout	-1	-	5	dBm	1
Extinction Ratio	ER	6	-	-	dB	
Receiver Characteristics						
Receiver Type			PIN			
Central Wavelength	λ	1480	1490	1500	nm	
Receiver Sensitivity	Sen	-	-	-23	dBm	2
Receiver Overload	P_{SAT}	-6	-	-	dBm	
Receiver Reflectance	RFL	-	-	-23	dB	
LOS Assert	LOSA	-35	-	-	dBm	

Notes

1. The optical power is launched into SMF.
2. PECL input, internally AC-coupled and terminated.
3. Measured with a PRBS 2^{31}-1 test pattern @10312Mbps, BER ≤1×10^{-12}.
4. Internally AC-coupled.

Timing and Electrical

Parameter	Symbol	Min	Typical	Max	Unit
Tx Disable Negate Time	t_on			2	ms
Tx Disable Assert Time	t_off			100	μs
Time To Initialize, including Reset of Tx Fault	t_init			300	ms
Tx Fault Assert Time	t_fault			100	μs
Tx Disable To Reset	t_reset	10			μs
LOS Assert Time	t_loss_on			100	μs
LOS De-assert Time	t_loss_off			100	μs
Serial ID Clock Rate	f_serial_clock		100	400	KHz
MOD_DEF (0:2)-High	V_H	2		Vcc	V
MOD_DEF (0:2)-Low	V_L			0.8	V

10G T1550/R1490nm 80km BIDI SFP+ Optical Transceiver Module

S-FB1054L80-xD

Digital Diagnostic Memory Map

The transceivers provide serial ID memory contents and diagnostic information about the present operating conditions by the 2-wire serial interface (SCL, SDA).

The diagnostic information with internal calibration or external calibration all are implemented, including received power monitoring, transmitted power monitoring, bias current monitoring, supply voltage monitoring and temperature monitoring.

The digital diagnostic memory map specific data field defines as following.

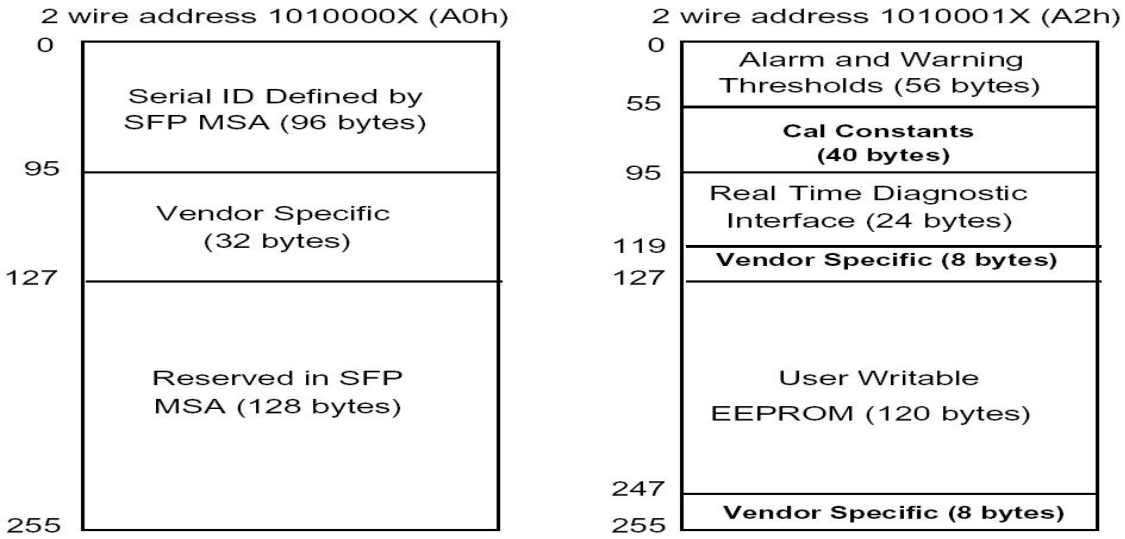

Pin Definitions

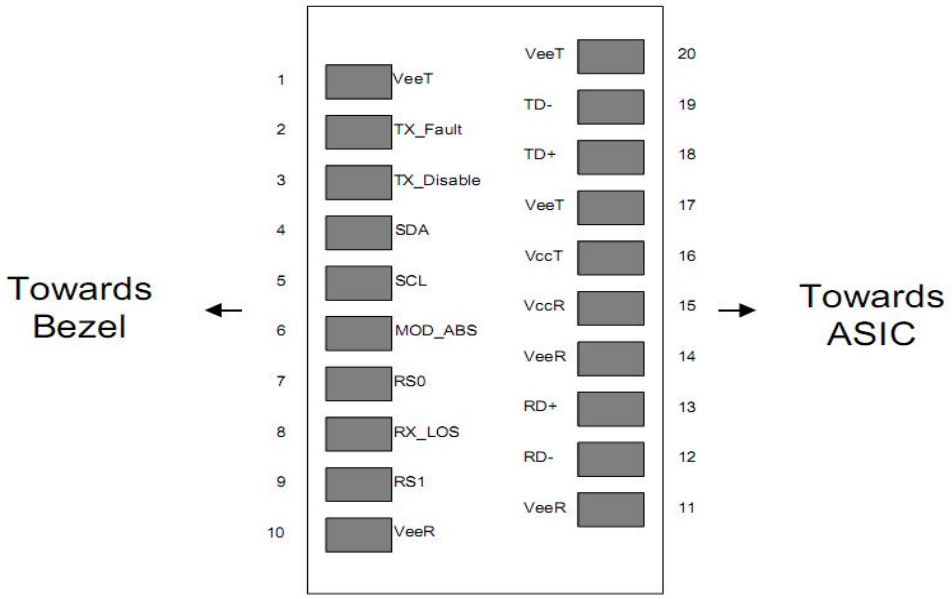

10G T1550/R1490nm 80km BIDI SFP+ Optical Transceiver Module

S-FB1054L80-xD

Pin	Symbol	Description	Plug Seq.	Notes
1	V_{EET}	Transmitter Ground	1	
2	TX FAULT	Transmitter Fault Indication	3	Note 1
3	TX DISABLE	Transmitter Disable	3	Note 2
4	SDA	SDA Serial Data Signal	3	
5	SCL	SCL Serial Clock Signal	3	
6	MOD_ABS	Module Absent. Grounded within the module	3	
7	RS0	Not Connected	3	
8	LOS	Loss of Signal	3	Note 3
9	RS1	Not Connected	3	
10	V_{EER}	Receiver ground	1	
11	V_{EER}	Receiver ground	1	
12	RD-	Inv. Received Data Out	3	Note 4
13	RD+	Received Data Out	3	Note 4
14	V_{EER}	Receiver ground	1	
15	V_{CCR}	Receiver Power Supply	2	
16	V_{CCT}	Transmitter Power Supply	2	
17	V_{EET}	Transmitter Ground	1	
18	TD+	Transmit Data In	3	Note 5
19	TD-	Inv. Transmit Data In	3	Note 5
20	V_{EET}	Transmitter Ground	1	

Notes

Plug Seq.: Pin engagement sequence during hot plugging.

1. TX Fault is an open collector output, which should be pulled up with a 4.7k~10kΩ resistor on the host board to a voltage between 2.0V and Vcc+0.3V. Logic 0 indicates normal operation; Logic 1 indicates a laser fault of some kind. In the low state, the output will be pulled to less than 0.8V.
2. Laser output disabled on TDIS >2.0V or open, enabled on TDIS <0.8V.
3. LOS is open collector output. Should be pulled up with 4.7k~10kΩ on host board to a voltage between 2.0V and 3.6V. Logic 0 indicates normal operation; logic 1 indicates loss of signal.
4. RD-/+: These are the differential receiver outputs. They are internally AC-coupled 100 differential lines which should be terminated with 100Ω (differential) at the user SERDES.
5. TD-/+: These are the differential transmitter inputs. They are internally AC-coupled, differential lines with 100Ω differential termination inside the module.

Recommended Interface Circuit

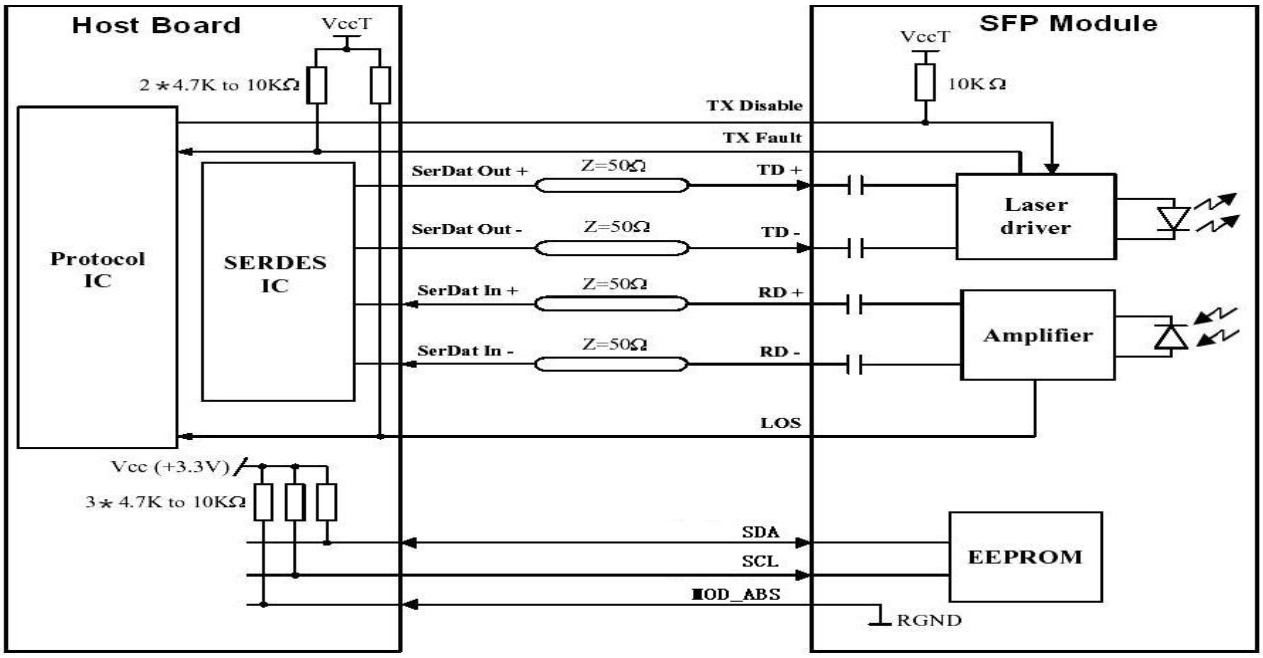

Recommended Host Board Supply Filtering Circuit

The Transceiver includes internal circuit components to filter power supply noise. Under some conditions of EMI and power supply noise, external power supply filtering may be necessary. If receiver sensitivity is found to be degraded by power supply noise, the filter network illustrated in the following figure may be used to improve performance. The values of the filter components are general recommendations and may be changed to suit a particular system environment. Shielded inductors are recommended.

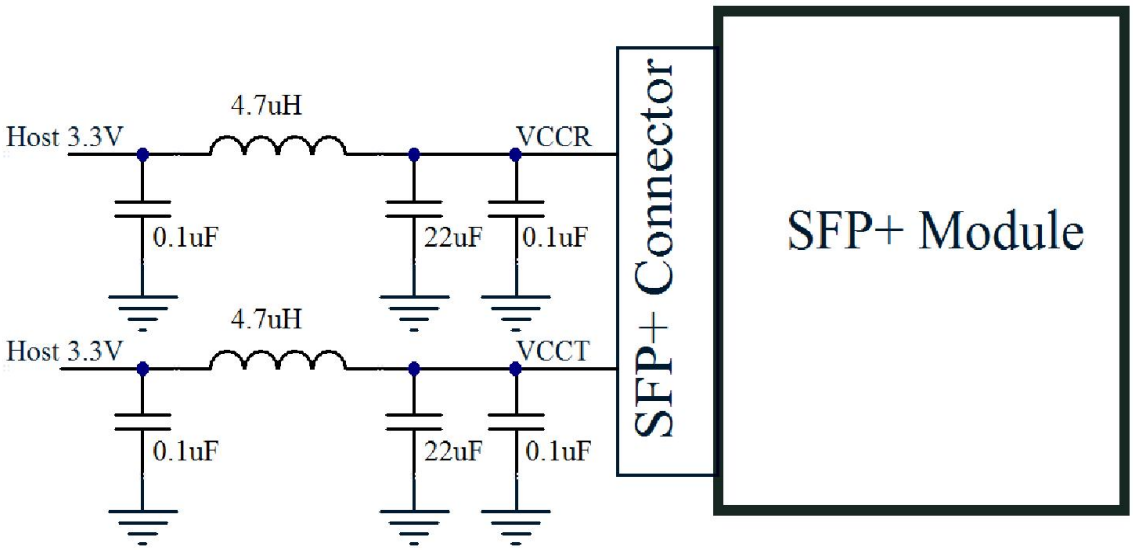

10G T1550/R1490nm 80km BIDI SFP+ Optical Transceiver Module

S-FB1054L80-xD

Mechanical Dimensions

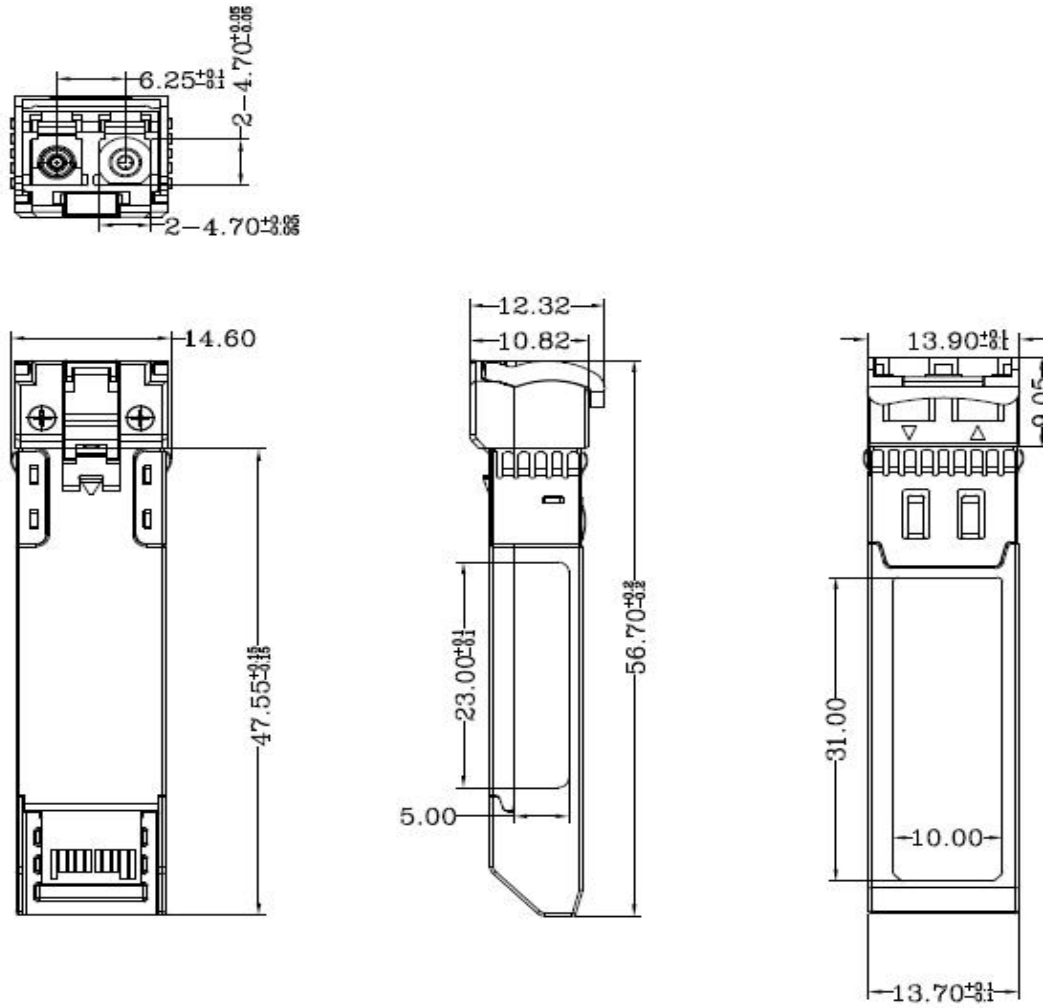

Ordering information

Part Number	Product Description
S-FB1054L80-CD	SFP+ BIDI Tx1550/Rx1490nm, 10.3125Gbps, SM,80km, 0ºC~+70ºC, With DDM